Advanced Management Science, 4(2), 132-138, 2015
ISSN: 2222-4955 (Print), ISSN: 2222-4963 (Online)
DOI: 10.7508/ams.2015.02.010

Review of Enterprises Financial Early-Warning Models

Hua Li[1, 2], Shiting Dou[1], Simin Yu[1]*

[1] *School of Business Administration, University of Science and Technology Liaoning, Anshan 114051, China*
[2] *Institute of Quantitative &Technical Economics, Chinese Academy of Social Sciences, Beijing 100732, China*

Abstract: The financial early-warning is one of the compositions of the enterprise early-warning system, if no preventive risk for enterprises; it will bring serious consequences to the enterprise. Therefore, it plays an important role in predicting whether enterprises encounter financial risk in the future. Based on the domestic and foreign scholars' research on enterprise financial early-warning models, after we describe and compare the advantages and disadvantages of each model, this paper review each model that can make the researchers of financial early-warning and practitioners have a preliminary understanding of the financial early-warning model. It provides strong support for their researches on the financial early-warning models. We can choose the appropriate model to study the financial early-warning.

Keywords: Enterprises' financial early-warning, early-warning model, review of the literature

I. Introduction

Han Yu once said: "Everything is pre-legislation, while not pre-waste." In order to make things happen in the scope of control, we should do a good job of forecasting and enterprises should be well prepared for all kinds of risk in the changing market. If no preventive risk for enterprises, it will bring serious consequences to the enterprise. Therefore, the financial early-warning plays a very important role in enterprises.

Each operation of the enterprise may be a crisis, in order to avoid the occurrence of enterprise crisis; financial early-warning has become an important method. Comprehensive financial early-warning research method coming from domestic and foreign scholars mainly can be divided into static and dynamic methods. The static financial early-warning mainly includes models such as: unary discriminate analysis model, multivariate discriminate analysis model, logistic regression analysis models and multivariate probabilistic regression analysis model. The dynamic financial early-warning model mainly includes: artificial neural network model, support vector machine (SVM) model and combined forecast model, etc. More famous researches are such as: the first people who study the financial early-warning is Fitzpatrick [1]; the Z-score model of Altman [2]; the probabilistic model of Ohlson [3]; the artificial neural network of M. Odom, Sharda [4]. A review of financial alert model may contribute to the broadening of our perception and facilitates our further study of the subject on the basis of pioneers' consideration and methodology.

II. Review of Discriminant Models

The classification of research object is discriminant analysis. Selecting and establishing discriminant function in the classification of known observation object and some observed object variables. Discriminate analysis is a statistical analysis method. Statistical methods include factor analysis, clustering analysis, principal component analysis and discriminate analysis, in which the early application in financial early-warning is discriminate analysis. Discriminate analysis is generally divided into both unitary discriminate model and multivariate discriminate model, where the unitary and multivariate refer to the number of explanatory variables, namely financial indicators. Discriminate analysis of hypothetical conditions is such as: data obey normal distribution; two groups of matrix covariance equal; there is not linear correlation among each explaining variables. Methods of establishing the discriminate analysis model are distance discriminate, Bayesian criterion, Fisher, regression method and non-parametric method, etc. If we choose different discriminate methods and guidelines, the accuracy of discrimination is different.

A. An Unitary Discriminate Model

Fitzpatrick [5] is the earliest researcher of financial early-warning model. She pointed out that the

Corresponding author: 14581579@qq.com

equity/debt and net profit/shareholders are the most accurate indicators to judge whether the enterprise crisis occurred. Beaver [6] first utilized the unitary analysis technique in investigation. She pointed out that the working capital/total asset is the most accurate indicator to judge whether the enterprise crisis occurred. Chen [7] who first utilized the unitary analysis technique in the domestic and pointed out the most accurate indicator is the liquidity ratio and debt ratio.

The two scholars have made outstanding contributions in the unitary model of financial early-warning, unitary model has accurately predicted corporate crisis before two years and three years, but for the year before the bankruptcy accuracy rate lower than the multivariate discriminate model, and unitary discriminate model also have limitations: it focuses on the problems of individual signals, this not only ignored the relationship with other variables, but also ignored the effect of other important factors. This makes managers have an opportunity to whitewash the rate, so that the true financial position of the enterprise is not enough. In this case, application of multivariate discriminate model will be more extensive than the unitary model.

B. The Multivariate Discriminant Model

Scholars in the domestic and foreign found multiple discriminate models including the Z-Score model, ZETA model, F model and Y model.

Altman [8] put forward the multivariate discriminate model which is widely used. 66 manufacturing companies from 1946 to 1965 as samples, and they were divided into two groups, one group of companies is based on the "National Bankruptcy Act" filed for bankruptcy, the other group is non-bankrupt companies. He chose 22 indicators from the company's liquidity, profitability, leverage, liquidity and operating ratios and chose five effective indicators through continuous operation and established discriminate model:

$$Z=0.012X_1+0.014X_2+0.033X_3+0.006X_4+0.999X_5 \quad (1)$$

Of which: X_1= Working capital divided by total assets, a measure of net current assets relative indicator of overall total capital; X_2= Retained earnings divided by total assets, the indicator has measured the enterprise cumulative profitability for some time; X_3= Earnings before interest and taxes/total assets, indicator reflected the real productivity of corporate assets in the exclusion of all taxes and leverage factors; X_4= Market value equity divided by book value of total debt, the indicator reflect the company's assets before liabilities exceed its assets how much it can depreciate, including the market value of the study; X_5= Sales divided by total assets, the ability to assess corporate assets generate income.

The prediction accuracy rate of enterprises bankruptcy was 95%, 72%, 48%, 29%, and 36% from one year before to five year before. Compared with the unitary model, the multivariate discriminate model has a higher accuracy rate.

Since the Z-Score model is not only for listed companies, but also the limitations of the industry. Altman, Haldeman, and Narayanan [9] “up-dates” the original study, the ZATE model is established. The variables in this model are as follows: return on assets, earnings volatility, interest earned ratio, current assets / current liabilities, retained earnings / total assets, earnings, common equity / total assets. The model predicted higher accuracy relative to the Z-Score model.

According to the Z-Score model of Altman, Zhou, Yang, and Wang [10] introduced the cash flow index and established F model. The 31 bankrupt companies and 31 non-bankrupt companies are from "The Wall Street Journal Index". Through continuous testing by software of SPSS-X, and ultimately the following model was established:

$$F=-0.18+1.11X_1+0.11X_2+1.93X_3+0.03X_4+0.50X_5 \quad (2)$$

Of which: X_1= (Balance of current assets - end of current liabilities) divided by total assets; X_2= Ending retained earnings / total assets; X_3= (Net income + depreciation) divided by average total liabilities; X_4= Market value of shareholders' equity divided by closing Total liabilities; X_5= (Net income + interest + depreciation) divided by average total assets.

It’s more than 4,000 samples tested by the composition of the accounting database, the accuracy of the test results reached 70%.

According to the Z-Score model of Altman, combining with practical securities market, Yang and Xu [11] proposed the Y model, this paper analyzed principal component by the method of principal component using SPSS software and selected 67 ST companies and non ST companies as samples. Finally, the model was established as follows:

$$Y=0.38\ X_1+0.19\ X_2+0.13\ X_3+0.11\ X_4+0.08\ X_5 \quad (3)$$

Of which: X_1 is the equity ratio, return on total assets and cumulative profitability; X_2 is cash flow ratio and the cash from operating activities divided by total debt ratio constitutes; X_3 is the main business growth; X_4 is profitability indicators, corporate profitability with cost of sales profit rate to represent; X_5 is quick ratio.

This model has certain accuracy, but it is also affected by the listed company data. This approach has a good inspiration for us to study the financial early-warning. Wan and Su [12] also used the Y model to study the financial early-warning.

The discriminate model has been used by the researchers [13, 14]. Many domestic scholars also use the discriminate model to study the financial crisis. Zhang [15] uses discriminate analysis method to establish the discriminate function. Fen and Li [16] proposed financial early-warning model based on the Z-Score model.

The discriminate analysis is widely used because of its competitive advantage over simple calculation, its low-cost, easy explanations, and not "bad" performance. But the statistical requirement of the normal distribution assumptions is seldom held. Therefore, the logistic model has a higher accuracy than the discriminate model in the follow-up study.

III. Review of Logistic and Probabilistic Models

A. Logistic Model

The earliest user of the logistic model is Martin [17], he used the logistic model which was applied to the banking sector in early warning and selected six indicators as explaining variables in the model, and ultimately established a logistic model.

B. Probabilistic Model

Ohlson [18] made a multiple logistic regression model in the application of the financial early-warning of mature, he selected 105 bankrupt companies and 2058 non-bankrupt companies from 1970 to 1976 as a sample study and established a multivariate logistic regression model based on the sample. The basic principles of multivariate logistic regression model are as follows:

For bankrupt companies and non-bankrupt companies in this sample, you can get:

$$l(\beta)=\sum_{i\in s_1}\log P(x_i,\beta)+\sum_{i\in s_2}\log\left[1-P(x_i,\beta)\right] \qquad (4)$$

In the above formula: $\ell(\beta)$ is a vector of predictors for the ith observation;

$Y_{kj}=f\left(\sum_{i=1}^{n}W_{(k-1)i,kj}Y_{(k-1)i}\right)$ are the unknown parameters;

$$P(Y_{kj}=f\left(\sum_{i=1}^{n}W_{(k-1)i,kj}Y_{(k-1)i}\right),$$
$$Y_{kj}=f\left(\sum_{i=1}^{n}W_{(k-1)i,kj}Y_{(k-1)i}\right))$$

represents the probabilistic of bankruptcy for any given y_i and y_i ; y_i represents the group of bankrupt enterprise; y_i represents the group of non-bankrupt enterprise.

Due to lack of empirical theory, for given the function, he choose a logistic function based on practical experience and understanding of computing convenience, namely:

$$P=(1+\exp\{-y_i\}^{-1}) \qquad (5)$$

Of which: $\max_\beta \max_\beta \max_\beta$ In the above formula: y=log [p/ (1-p)]; P is increasing with the growth of y. For the given function P, the maximum likelihood estimation of $\max_\beta$ …, it can be obtained by the above formula:

$$\max_\beta \ \ell(\beta) \qquad (6)$$

According to the basic formula, Ohlson combined with its sample of nine selected explaining variables, these explaining variables include: SIZE= log (total assets/GNP, GNP is the index of price); TLTA= Total liabilities divided by total assets; WCTA= Working capital divided by total assets; CLCA= Current liabilities divided by current assets; OENEG= One if total liabilities exceeds total assets, zero otherwise; NITA= Net income divided by total assets; FUTL = Funds provided by operations divided by total liabilities; INTWO= One if net income was negative for the last two years, zero otherwise; CHIN= $P=\int_{-\infty}^{\alpha+\beta X}\frac{1}{\sqrt{2\pi}}e^{-t^2/2}d_t$,where $P=\int_{-\infty}^{\alpha+\beta X}\frac{1}{\sqrt{2\pi}}e^{-t^2/2}d_t$ is net income for the most recent period. The denominator acts as a level indicator. The variable is thus intended to measure change in net income.

Zmijewski [19] conducted the following study; he first proposed the study of probabilistic functions over financial early-warning. Its criterion also requires non-bankruptcy P more than 0.5, P less than 0.5 for the bankruptcy process and the calculation process to calculate the probabilistic function. Logistic function is somewhat similar. First, to establish the maximum likelihood function, by calculating the maximum

likelihood function evaluation and a coefficient, where the logistic functions is different from the probabilistic function, namely:

$$P = \int_{-\infty}^{\alpha+\beta X} \frac{1}{\sqrt{2\pi}} e^{-t^2/2} d_t \tag{7}$$

Through the basic formula above, Zmijewski selected industrial enterprises from 1972 to 1978 as its research sample, net income / total assets, total liabilities / total assets, current assets / current liabilities for the explaining variables; the probabilistic model was eventually established.

C. The Summary

Foreign scholars Hammer, Kogan, and Lejeune [20], and Nikolic, Zarkic-Joksimovic, Stojanovski, and Joksimovic [21] applied the logistic model to the financial early-warning. According to Olhson's logistic regression model, domestic scholars started launching corresponding research. Wu and Lu [22] used binary logistic model to study financial early-warning. Zhang [23] used a reverse logistic regression model to predict the financial risk of the enterprise. Predictors of more effective are "operating cash flow" and "debt ratio". Li, Chen and Zhao [24] took probabilistic model and logistic model for comparison and found that the probabilistic model had higher prediction accuracy.

Logistic and probabilistic do not encompass the normality assumption, nor does their predicted probabilistic fall outside a binary range. However, they are criticized over a need to transform the original variables and the complicated computations involved. Then, the dynamic model is applied to the financial early-warning.

IV. Review of Artificial Neural Networks

Artificial neural network is a dynamic model, which refers to real people on the physiology of brain structure and function and characteristics of network theoretical abstraction, simplification and simulation constitute an information system. Artificial neural network is a nonlinear input-- output relationship. Characteristics of artificial neural networks are: non-linear mapping, adaptive learning, and stronger fault tolerance to deal with changing business errors.

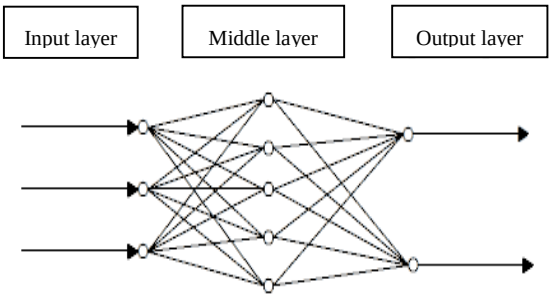

Figure 1. An artificial neural network model.

It is based on a multi-front error back propagation algorithm to the neural network; BP model consists of an input layer, hidden layer and output layer, as shown in Figure 1.

Formulas hidden layer and output layer is

$$Y_{kj} = f\left(\sum_{i=1}^{n} W_{(k-1)i,kj} Y_{(k-1)i}\right) \tag{8}$$

Of which: Sigmoid function; was the first k-1 layer neurons i and j k layer connection weights of neurons; was the first k-1 i-th neuron in the output layer, namely the first enter k layer; n is the number of neurons in the first k-1 layer.

The earliest artificial neural network is applied to financial early warning by Odom and Sharda. [25], they derived discriminate model better than artificial neural network to predict accurate conclusions. Tam and Kiang [26] used the discriminate analysis, logistic analysis, decision trees, neural networks monolayer and multilayer neural networks to compare the results of the last two years before the comprehensive bankruptcy prediction, the highest prediction accuracy obtained is the multilayer neural networks. Subsequently, Salchenberger, Cinar, and Lash [27], Coats and Fant [28], Altman, Marco, and Varetto [29] also compared the artificial neural networks with other models; the predictive accuracy of artificial neural network model is relatively higher. Scholars who used artificial neural network model to study financial early-warning are Philippe du Jar din [30], as well as Abdipour, Nasseri, and Akbarpour [31].

There are also domestic scholars used the neural network model to study financial early-warning. Duan [32] compared artificial neural networks with multiple discriminant model comparison and found that artificial neural networks not only improved the prediction accuracy, but also reduced the Type I error. Yang and Li [33] established a financial early-warning model based on artificial neural networks. Zhong and Yang [34] improved the original artificial neural network; the improved artificial neural networks had higher prediction accuracy than the original artificial neural network.

Through these studies can be found that the artificial neural network has better fault tolerance and self- recognition capability that can handle non-linear problems. But its theoretical abstract make it difficult to understand. Subsequently, some scholars have proposed SVM applied to financial early-warning model.

V. Review of SVM

Vapnik [35] put forward support vector machine theory, it is to solve the nonlinear, small samples with

high dimensional problems identified and has certain advantages, it can be generalized to other learning function fitting. SVM is based on statistical learning theory and a limited sample size and model learning ability to seek an optimal combination of complexity so that the support vector machine applications can better promoted. Support vector machines and neural networks are learning tool, but the difference is that a support vector machine use optimization techniques and mathematical methods.

First, support vector machine defines non-linear inner product function and transforms the input space into a high-dimensional space and find the optimal classification surface in this space. SVM classification function is similar to a neural network, the output is a linear combination of intermediate nodes, and each intermediate node corresponds to a support vector, shown in Figure 2:

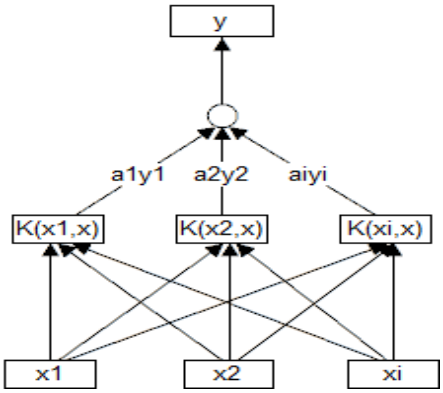

Figure 2. Schematic diagram of SVM.

The optimization of support vector machine used in corporate crisis forecast by Jae and Lee [36]. In the same year, Gestel, Baesens, Johan. Suykens [37] selected sample of bankrupt enterprises Netherlands, using support vector machine to study bankruptcy prediction.He obtained 88.39% prediction accuracy, and found the result is better than discriminant analysis and logistic regression models. Shin, Lee, and Kim [38] found that the neural network in a small sample of test accuracy is not high, but when the same test to predict the value of support vector machines significantly higher than the neural network. Danenas and Garsva [39], Feki, Ishak, and Feki [40] also will use the support vector machines for the financial early-warning.

Many domestic scholars will also use the support vector machine in corporate bankruptcy prediction, such as Hui and Wang [41] used listed companies as samples and proved SVM applied to small samples of bankruptcy prediction more convincing. The neural network and support vector machines for comparison by Song and Yong [42], they found support vector machine is more effective in predicting the bankruptcy of small samples. The support vector machine model was applied to GEM listed company's financial early-warning by Liu [43], and drawn high accuracy. Zheng, Liu, and Huang [44] applied the maximum and minimum probability machine method to study financial early-warning based on support vector machine theory.

After continuous study, it is found that SVM had a higher discriminate accuracy, but there are some limitations of its own, for example, a large sample predictive accuracy is not high, it only applies to predict small sample; if it is multiple variables, it is difficult to explain by using support vector machine. Therefore, we studied the methods of financial early-warning model. We should be hard to find better, more suitable methods.

VI. Review of Other Warning Models

According to the theory of financial crisis early-warning, some domestic scholars also explored some new methods. Yao and Jiang [45] selected 96 listed companies from 2003 to 2005 in China A-share market as samples, and in accordance with the basic theory of the decision tree, they established financial early-warning about the decision tree model, and proved decision tree has a higher prediction accuracy. According to the theory of neural networks and decision trees, Cao, Shan, and Liang [46] established a mixed financial early-warning model (HFPM), the results obtained with the classic Z discriminant model were compared and found HFPM has a higher predictive accuracy. Wu, Wu, and Zhong [47] established a new financial early-warning model based on entropy theory, which not only enabled users to more fully understand the financial situation of enterprises, but also objectively given index weights obtained through empirical analysis: the predicted results have strong practicality and feasibility. Zheng, Liu, and Huang [48] applied the maximum and minimum probability machine method to establish a financial model and obtained good predictions.

VII. Conclusion

Financial early-warning model from generation to mature has more than 80 years. In the research process across the enterprise financial early-warning model, they have been put forward their views and opinions. Scholars who from a simple unitary discriminate model, multivariate discriminant model, logistic model, the probabilistic model to a dynamic artificial neural network model, support vector machine model etc., the model has been improved gradually. Each model has its own advantages and disadvantages: discriminate model has high accuracy and discrimination straight forward calculation process, but the model needs to meet

stringent assumptions and subjective inference. Logistic model and probabilistic model relative to the discriminant model identification accuracy has increased, but the calculation is more complicated. Artificial neural networks have better fault tolerance and self-recognition capability that can handle non-linear problems, but its theoretical abstract, make it difficult to understand. Although improved SVM has a higher accuracy, it is only suitable for small sample. When researchers study financial early-warning, they not only select a different model, but also choose different targets, it is because the theory is not perfect in this regard, many non-quantifiable indicators affecting corporate crises have been ignored, and subsequent researchers should pay attention to these aspects. In recent years, the hybrid model and comparative model have become a research trend, but each model has its own advantages and limitations, researchers and financial early-warning practices can choose appropriate model according to the specific situation application or innovation.

ACKNOWLEDGMENT

The authors would like to thank for the support by Natural Science Foundation of China under the Grant 71371092 and 71301015. The authors also thank for the support by Outstanding Young Scholars Growth Plan of Liaoning University under the Grant LJQ2011010.

REFERENCES

[1] P. J. Fitzpatrick, "A Comparison of Ratios of Successful Industrial Enterprises with those of Failed Finns," *Certified Public Accountant*, vol. 10, pp. 598-605, October 1932.

[2] E. I. Altman, "Financial Ratios, Discriminant Analysis and the Prediction of corporate bankruptcy," *Journal of Finance*, vol. 22, pp. 589-609, 1968.

[3] J. A. Ohlson, "Financial Ratios and Probabilistic Prediction of Bankruptcy," *Journal of Accounting Research*, Vol. 18, pp. 109-131, 1980

[4] M. Odom and R. Sharda, "A Neural Networks Model for Bankruptcy Prediction," in *Proceedings of the IEEE International Conference on Neural Network*, pp. 163-168, 1990.

[5] P. J. Fitzpatrick, "A Comparison of Ratios of Successful Industrial Enterprises with those of Failed Finns," *Certified Public Accountan*, vol. 10, pp. 598-605, October 1932.

[6] W. H. Beaver, "Financial as Predictors of Failure," *Journal of Accounting Research*, pp. 71-111, 1966.

[7] J. Chen, "An Empirical Analysis of the Listed Company Financial Deterioration Prediction," *Accounting Research*, pp. 31-38, 1999.

[8] E. I. Altman, "Financial Ratios, Discriminant Analysis and the Prediction of corporate bankruptcy," *Journal of Finance*, vol. 22, pp. 589-609, 1968.

[9] E. I. Altman, R. Haldeman, and P. Narayanan, "Zeta Analysis: a New Model to Identify Bankruptcy Risk of Corporations," *Journal of Banking and Finance*, pp. 29-54, 1977.

[10] S. H. Zhou, J. H. Yang, and P. Wang, "On the Financial Crisis Early-warning Analysis – F Score Model," *Accounting Research*, pp. 8-11, 1996.

[11] S. Yang and W. G. Xu, "Financial Crisis Warning Model - An Empirical Study on Y model," *China Soft Science*, pp. 56-60, 2003.

[12] X. Wan and Q. G. Su, "Analysis of Forwarding of Listed Corporations' Financial Failure," *Business Research*, pp. 78-81, 2003.

[13] T. Korol, "Early Warning Models Against Bankruptcy Risk for Central European and Latin American," *Enterprises Economic Modelling*, vol. 31, pp. 22-30, 2013

[14] S. Lee and W. S. Choi, "A Multi-industry Bankruptcy Prediction Model Using Back-propagation Neural Network and Multivariate Discriminant Analysis," *Expert Systems with Applications*, vol. 40, pp. 2941-2946, 2013.

[15] L. Zhang, "Discriminant Model of Financial Crisis Early-warning Analysis and Its Application," *Forecast*, pp. 38-40, 2000.

[16] X. F. Huang and W. H. Li, "Financial Early-warning System of Enterprise Based on Z-Score Model," *Accounting Communications*, pp. 46-49, 2013.

[17] D. Martin, "Early Warning of Banking Failure: A Logic Regression Approach," *Journal of Banking and Finance*, vol. 1, pp. 249-276, 1977.

[18] J. A. Ohlson, "Financial Ratios and Probabilistic Prediction of Bankruptcy," *Journal of Accounting Research*, vol. 18, pp. 109-131, 1980.

[19] M. E. Zmijewski, "Methodological Issues Related to the Estimation of Financial Distress Prediction Models," *Journal of Accounting Research*, vol. 22, pp. 59-82, 1984.

[20] P. L. Hammer, A. Kogan, and M. A. Lejeune, "A logical Analysis of Banks' Financial Strength Ratings," *Expert Systems with Applications*, vol. 39, pp. 7808-7821, 2012.

[21] N. Nikolic, N. Zarkic-Joksimovic, D. Stojanovski, and I. Joksimovic, "The Application of Brute Force Logistic Regression to Corporate Credit Scoring Models: Evidence from Serbian Financial Statements," *Expert Systems with Applications*, vol. 40, pp. 5932-5944, 2013.

[22] S. N. Wu, X. Y. Lu, "A Study of Models for Predicting Financial Distress of in China's Listed Companies," *Economic Research*, pp. 25-28, 2001.

[23] X. L. Zhang, "Empirical Research on Logistic Regression Model of Enterprise Financial Early-warning," *Search*, pp. 36-38, 2012

[24] H. K. Li, Y. F. Chen, and G. Zhao, "Research on Financial Early-warning Based on Cash Flow: to Explore the Application of Linear Probability Model and Logistic Model," *Economic Problems*, pp. 102-105, 2011.

[25] M. Odom and R. Sharda, "A Neural Networks Model for Bankruptcy Prediction," in *Proceedings of the IEEE International Conference on Neural Network*, pp. 163-168, 1990.

[26] K. Tam and K. M. Managerial, "Applications of the Neural Networks: The Case of Bank Failure Predictions," Management Science, vol. 38, pp. 416-430, 1992.

[27] L. Salchenberger, E. Cinar, and N. Lash, "Neural Networks: A New Tool for Predicting Thrift Failures," *Decision Sciences*, vol. 23, pp. 899-916, 1992.

[28] P. Coats and L. Fant, "Recognizing Financial Distress Patterns Using a Neural Network Tool," *Financial Management*, vol. 22, pp. 42-155, 1993.

[29] E. I. Altman, G. Marco, and F. Varetto, "Corporate Distress Diagnosis: Comparisons Using Linear Discriminant Analysis and Neural Networks," *Journal of Banking and Finance*, vol. 3, pp. 505-529, 1994.

[30] P. du Jardin, "Predicting Bankruptcy Using Neural Network and Other Classification Methods: The Influence of Variable Selection Techniques on Model," *Accuracy Neurocomputing*, vol. 73, pp. 2047-2060, 2010.

[31] S. Abdipour, A. Nasseri, and M. Akbarpour, "Integrating Neural Network and Colonial Competitive Algorithm: A New Approach for Predicting Bankruptcy in Tehran Security Exchange," *International Journal of Management and Sustainability*, vol. 2, pp. 113-123, 2013.

[32] D. M. Zheng, "Financial Distress Prediction Model based on Artificial Neural Network," *Statistics and Decision*, pp. 37-38, 2004.

[33] S. Yang and H. Li, "Financial Warning Model of Listed Companies Based on BP Neural Network," *Systems Engineering Theory and Practice*, pp. 13-26, 2005.

[34] X. Z. Bao and Y. Yang, "Enterprise Financial Crisis based on Clustering-Rough Set-Neural Networks," *Journal of Systems Management*, pp. 358-365, 2013.

[35] V. N. Vapnik, *The Nature of Statistical Leaning Theory*, New York: Springer-Verlag, 1995.

[36] H. M. Jae and Y. C. Lee, "Bankruptcy Prediction Using Support Vector Machine with Optimal Choice of Kernel Function Parameter," *Expert Systems with Applications*, vol. 28, pp. 603- 614, 2005

[37] T. V. Gestel, B. Baesens, A. K. J. Suykens, "Bayesian Kernel Based Classification for Financial Distress Detection," *European Journal of Operational Research*, vol. 172, pp. 979-1003, 2005.

[38] K. S. Shin, T. S. Lee, and H. J. Kim, "An Application of Support Vector Machines in Bankruptcy Prediction Model," *Expert Systems with Applications*, vol. 28, pp. 127-135, 2005.

[39] P. Danenas and G. Garsva, "Credit Risk Modeling of USA Manufacturing Companies Using Linear SVM and Sliding Window Testing Approach," *Business Information Systems*, vol. 117, pp. 249-259, 2012.

[40] A. Feki, A. B. Ishak, and S. Feki, "Selection using Bayesian and Multiclass Support Vector Machines Approaches: Application to Bank Risk Prediction," *Expert Systems with Applications*, vol. 39, pp. 3087-3099, 2012.

[41] S. B. Hui, W. J. Wang, "Financial Early-warning Model based on Support Vector Machine (SVM) and Application," *Computer Engineering and Design*, vol. 27, pp. 1183-1186, 2006.

[42] X. P. Song and S. Yong, "Study on Business Failure Prediction Based on Optimized Support Vector Machine Model," *Management Science*, vol. 21, pp. 115-121, 2008.

[43] P. Liu, "Research on Financial Early-Warning of GEM Companies," *Finance and Accounting Monthly*, pp. 11-14, 2013.

[44] S. J. Zhong, Z. X. Liu, and Z. Q. Huang, "The Financial Early-warning Model of Minimax Probability Classification," *Statistics and Decision*, pp. 27-30, 2013.

[45] K. H. Yao and Y. H. Jiang, "Financial Early-warning Analysis Based on Decision Tree," *Systems Engineering*, vol. 23, pp. 102-106, 2005.

[46] M. Cao, S. Q. Shan, and H. Y. Liang, "Design and implementation of financial prewarning model based on data-mining," *Computer Applications*, vol. 26, pp. 2421-2424, 2006.

[47] F. Wu, Y. Y. Wu, and W. J. Zhong, "The Construction of the Listed Companies' Financial Early-warning Model," *Management Science*, pp. 15-17, 2009.

[48] S. J. Zhong, Z. X. Liu, and Z. Q. Huang, "The Financial Early-warning Model of Minimax Probability Classification," Statistics and Decision, pp. 27-30, 2013.